OPERATING INSTRUCTIONS

Pressure Test 1700 and Pressure Test 3500

26-1800, 70-5130

ELE International Chartmoor Road, Chartwell Business Park Leighton Buzzard, Bedfordshire, LU7 4WG England phone: +44 (0) 1525 249200 fax: +44 (0) 1525 249249 email: ele@eleint.co.uk http://www.ele.com ELE International, a division of Hach Lange Ltd.	***Distributor:***	**ELE International** Soiltest Product Division PO Box 389, Loveland, CO 80539 USA phone: +1 (800) 323 1242 fax: +1 (970) 663 9781 email: soiltest@eleusa.com http://www.eleusa.com
In the interests of improving and updating its equipment, ELE reserves the right to alter specifications to equipment at any time ***ELE International 2005 ©***		

Contents

Section		Page
1	**Introduction**	**3**
2	**Setting Up the Apparatus**	**3**
3	**Operation**	**5**
4	**Maintenance**	**6**
5	**Draining the System**	**6**
6	**Belt Tension**	**7**
7	**Accessories and Spares Kit**	**7**

Declaration of Conformity Certificate

Noise Test Certificate

Product Safety Data Sheet for Shell Tellus Oil T

WEEE Directive

1 Introduction

1.1 These constant pressure systems offer very versatile apparatus for the Soil and Rock Mechanics laboratory.

1.2 Two models are available, 1700 kPa and 3500 kPa (maximum pressure). Both machines have continuously variable pressure output from minimum to maximum. This is increased by rotating the handwheel (1) in a clockwise direction.

1.3 A specially designed constant pressure valve controls the pressure of the oil and hence to the oil/water interface vessel (2). Capacity of this vessel is approximately 1 litre.

1.4 The output is via two “constant volume” valves (3).

1.5 The machines are supplied without a gauge so that customers may use existing test gauges if they have them. Gauges are available if required (see section 7).

1.6 The on/off switch (5) contains a thermal overload device, which provides protection to the apparatus.

1.7 A dump valve (6) is provided to allow the apparatus to be recharged with de-aired water at the end of a test.

1.8 The apparatus stands on four feet. The apparatus need not be perfectly level, but the feet should be adjusted to prevent rocking.

2 Setting up the Apparatus

2.1 Do not connect to supply at this stage.

2.2 Electrical supply

Safety

Whilst the test is in operation do not remove any covers or attempt to adjust any part of the machine.

Ensure all moving parts are thoroughly secured before attempting any maintenance.

Ensure all appropriate measures are taken to protect the operator from excessive noise. See noise certificate (when supplied).

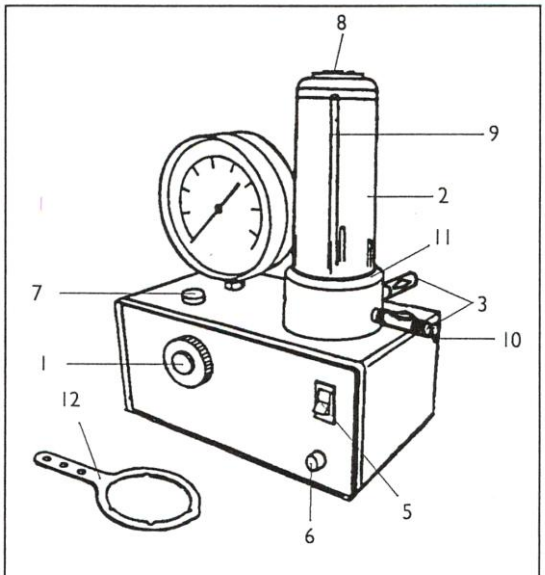

Figure 1 Early model Pressure Test 1700 (with gauge fitted)

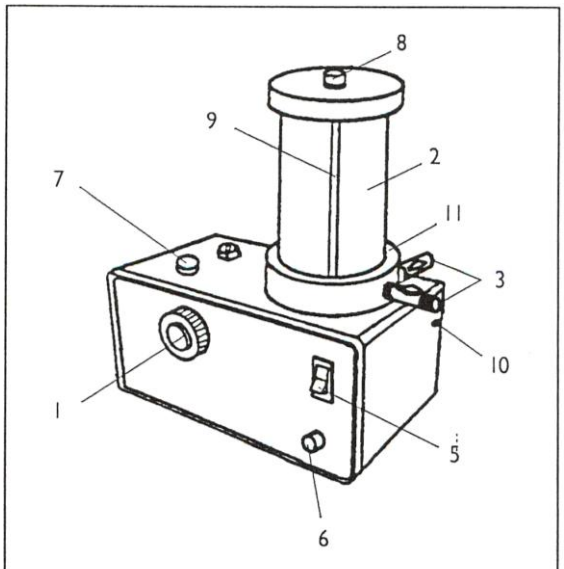

Figure 2 Pressure Test 3500 and later model Pressure Test 1700

Electrical safety

Warning: Before removing any covers, or performing maintenance repair and service, isolate from electrical supply by removing mains plug. Where mains supply is required during these activities, only competent persons should perform the work.

Check that the power supply is compatible with the requirements stated on the label and connect in accordance with IEE regulations or to local requirements.

Local isolation to machine is required.

This machine may be operated through a standard 13 amp socket outlet when fitted with an appropriate 3 pin plug fused in accordance with the label.

The power cable is coded as follows:

Brown wire	L	Live or Power
Blue wire	N	Neutral
Green/Yellow wire	E	Earth or Ground

Important: this equipment must be correctly earthed.

Note: exercise extreme caution when using the machine with wet hands. Dry hands before operating machine.

Portable Appliance Tests (PAT)

All ELE designed products are tested for electrical safety prior to sale.

An electrical safety test label is fitted, (usually adjacent to the mains input socket).

Should no label be found, please contact ELE Service Department quoting the serial number of the equipment.

Organisations have an obligation to ensure equipment is maintained and is safe for use. Regular PAT testing is one means of ensuring equipment continues to be electrically safe.

Important: do not connect PAT leads to sensitive components such as PCBs, control switches and the like.

DO NOT FLASH TEST ELECTRONIC EQUIPMENT.

If in doubt as to the most suitable connection point (which will usually be an earth stud or an external earth connection) contact ELE Service Department for assistance.

2.3 Remove filler cap (7) and fill reservoir with oil supplied, check that dump valve (6) is fully closed.

Note: when refilling with oil it is important to only use 2 litres exactly, see section 4.2.

2.4 Remove bleed screw (8) and connect valve (3) to suitable de-aired water supply. The water reservoir should be approximately 1 metre above the apparatus or should be pressurised.

2.5 Open valve (3) and allow the water to flow into the clear vessel (2) until it reaches almost to the top of the oil transfer tube (9) inside the vessel (2). Close valve (3).

Note: do not allow water to cover the top of the transfer tube as this may result in water contamination in the oil reservoir.

Warning: do not switch machine on with a pressure in the interchange vessel. Always dump pressure before switching on.

2.6 Connect machine to mains and switch on (5). Oil will be seen flowing up the oil transfer tube and floating on top of the water. Before the vessel is full replace the bleed screw but do not tighten.

2.7 Oil and air will be seen emerging from the bleed screw as the vessel fills up. When all the air is flushed from the system, tighten the bleed screw.

2.8 Switch off machine and allow the oil to settle. Some air may be seen in the transfer tube and when this stops forming, tap the machine to release the air and open the bleed screw (8) and switch machine on.

2.9 Repeat 2.5 to 2.7 until no further air is seen in the transfer tube.

2.10 Close the bleed screw and switch off machine. The apparatus is now ready for use.

3 Operation

3.1 Before using the apparatus in an actual test, it is recommended that the operator familiarises himself with the mode of operation.

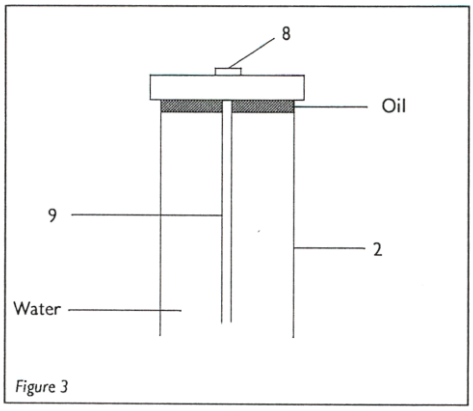

Figure 3

3.1.1 If a gauge is fitted to the apparatus, close valves (3) and check that dump valve (6) is fully closed.

3.1.2 If customer's external gauge is to be used, connect one valve (3) to gauge circuit (¼ inch BSP connection) avoiding the trapping of air. Check that dump valve (6) is fully closed.

3.1.3 Ensure the handwheel (I) is turned fully anti-clockwise to the stop before switching on.

3.1.4 Switch on and allow to run for a few seconds.

3.1.5 The load gauge should register a small increase in pressure.

3.1.6 Turn the handwheel (I) in a clockwise direction and observe the increase in pressure.

Note: there are approximately 25 turns from minimum to maximum pressure.

3.1.7 If no increase in pressure is observed, check:

That dump valve (6) is fully closed.

If the gauge is fitted on apparatus, that the valves (3) are fully closed.

If an external gauge is used, that there is continuity of connection.

That the motor is running. The light on the switch glows, and a faint hum can be heard.

If there is still no pressure increase, contact the ELE Service Department.

3.1.8 The operator can now check action of handwheel (I) and dump valve (6) until he is fully familiar with these actions.

3.2 Connect valve (3) to test set-up. Allow a 15 to 30 minute warm-up period before proceeding to use with a test technique. The apparatus is now ready for use.

3.3 If the level of water drops to the base (II) of the oil water interchange vessel, switch off the machine. Open dump valve (6) and re-prime the vessel with water through valve (3) (see section 2.3).

Note: do not allow water to cover the top of the transfer tube as this may result in water contamination in the reservoir.

The pressure is not controllable to zero so a minimum pressure of approximate 20 kPa should be expected.

4 Maintenance

4.1 Unless an oil leak is observed there should be no reason to check the oil level between changes.

4.2 If the apparatus is used continuously it is recommended that both oil and water are changed at 3 to 4 month intervals to minimise contamination.

Important: only one type of oil can be used with this machine. The reference for this oil is Tellus T46 and ELE can supply this in the correct quantity for refilling (26-1805).

Note: when refilling with oil, use exactly 2 litres. More or less than this quantity will seriously degrade the working of this machine.

4.3 At the same time the oil water interface vessel should be removed and cleaned.

5 Draining the System

5.1 Disconnect the mains.

5.2 Place outlet from valve (3) below the level of the unit into a suitable drainage container.

5.3 Remove bleed screw (8), open valve (3) and allow water to drain away.

5.4 When the level of the oil is seen to be below the base (11) remove the vessel (2), turning anti-clockwise with the spanner supplied (12) (1700 earlier models only). On the 3500 and later 1700 models the tie rod nuts need to be removed.

5.5 Wash the vessel in warm soapy water using a soft cloth to wipe the inside. Dry thoroughly.

5.6 Using absorbent material remove the residue of oil and water from inside the base (11).

5.7 Check the ‘O’ rings, ensure they are clean and free from cuts, etc.

5.8 Lightly grease the bottom face of the vessel and replace. Tighten using spanner provided (1700 earlier models only).

5.9 Remove the drain plug (13), having first positioned a container under the apparatus to collect the old oil.

5.10 When all the oil is drained from the reservoir (tipping the apparatus back will help remove any residue), replace drain plug (13) and tighten.

5.11 Refer to section 2 for refilling.

6 Belt Tension

6.1 It is important to maintain the correct belt tension for pump drive to avoid damage to the pump.

6.2 To check and adjust, remove the rear cover of the machine by removing the 2 top rear side screws (10) and the 3 lower rear screws (16).

6.3 Check the belt movement, which should be approximately 12 mm.

6.4 If this is not correct, adjust by slackening the 4 motor fixing bolts (14) and moving the motor as necessary.

Note: ensure that the motor drive shaft remains square to the belt.

6.5 Tighten the motor bolts and test run before replacing the rear cover.

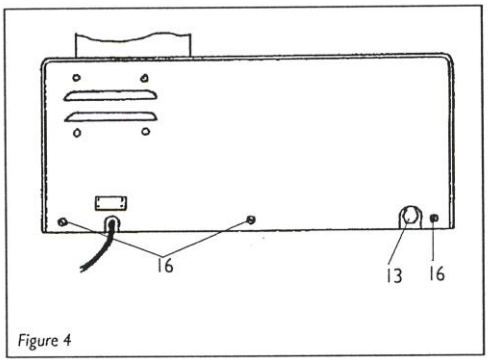

Figure 4

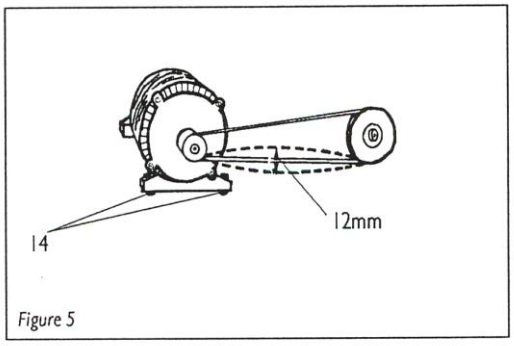

Figure 5

7 Accessories and Spares Kit

Description	Pressure Test 1700	Pressure Test 3500
Spares Kit	26-1800/K	-
Oil (2 litres)	26-1805	26-1805
Pressure Gauge	26-1815	70-5135/10
Pressure Transducer	27-1633	27-1635

Declaration of Conformity

Issued By: **ELE International**

Date of Issue: 1 January 1998 ELE doc ref: 9901X0023

ELE International

Approved Signatory

We, ELE International, Chartmoor Road, Chartwell Business Park, Leighton Buzzard, Beds LU7 4WG, England, declare under sole responsibility that the following product(s) to which this declaration relates is (are) in conformity with the provisions of:

73/23/EEC Electrical Equipment Directive implemented in the UK by S1728/1989 amended by 93/68/EEC 1/1/1997.

Electrical Safety tested to BS EN 60204-1.

89/392/EEC, 91/368/EEC, 93/44/EEC and 93/68/EEC Machinery Directive implemented in the UK by S13073/1992 and S12063/1994.

89/336/EEC, 91/263/EEC, 92/31/EEC (the EMC Directive) amended by 93/68/EEC and implemented in the UK by SI/2372/1992 and SI/3080/1994.

Emissions tested to BS EN 50081-1 Domestic/Light Industrial.
Immunity tested to prEN 50082-2 Industrial.

Product Description		Serial No.
Pressure Test 1700	26-1800 series	(See details on product identification plate)
Pressure Test 3500	70-5130 series	

BS EN ISO9001: 1994 approved
Certificate number 860461

Responsible person's/approved signatory
M Green, Managing Director

This Declaration of Conformity complies with BS 7514 (EN 45014), General Criteria for suppliers' Declaration of Conformity

ELE International
Chartmoor Road, Chartwell Business Park, Leighton Buzzard, Beds, LU7 4WG England
phone: + (0)1525 249200
fax: + (0)1525 249249
email: ele@eleint.co.uk
http: www.ele.com
ELE International, a division of Danaher UK Industries Ltd

Noise Test Certificate

Issued By: **ELE International**

Date of Issue: 21 October 1996 ELE doc ref: 9901X0023

Date of Test: 21 October 1996

ELE International

Approved Signatory

We, ELE International, Chartmoor Road, Chartwell Business Park, Leighton Buzzard, Beds LU7 4WG, England, declare under sole responsibility that the following product(s) to which this declaration relates is (are) in conformity with the provisions of:

89/392/EEC, 91/368/EEC, 93/44/EEC and 93/68/EEC Machinery Directive implemented in the UK by S13073/1992 and S12063/1994.

Product Description	Serial No.
Pressure Test 1700 26-1800 series Pressure Test 3500 70-5130 series	(See details on product identification plate)

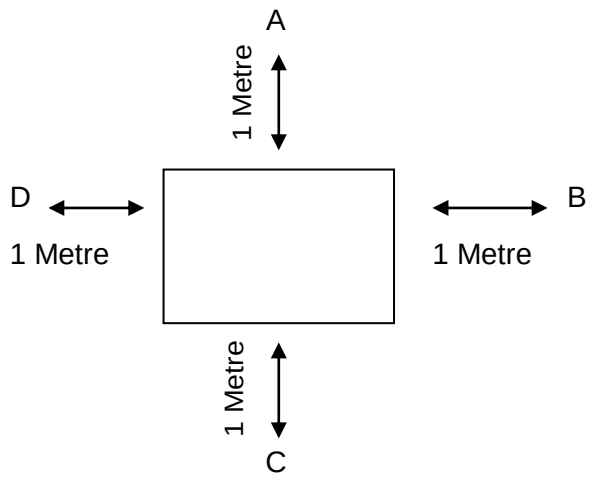

Measurements/recorded noise level

Position A	60	dB
Position B	60	dB
Position C	60	dB
Position D	60	dB
Position E	64	dB

(Normal operator position)

Background Noise level	47	dB

Notes: Tested on a bench under maximum load conditions.

BS EN ISO9001: 1994 approved
Certificate number 860461

Noise tests were carried out using Test Meter, serial No.

N30863

which has been calibrated using calibrated standards traceable to national standards of measurement.

ELE International
Chartmoor Road, Chartwell Business Park, Leighton Buzzard, Beds, LU7 4WG England
phone: + (0)1525 249200
fax: + (0)1525 249249
email: ele@eleint.co.uk
http: www.ele.com
ELE International, a division of Danaher UK Industries Ltd

PRODUCT SAFETY DATA SHEET

COPY

SHELL TELLUS OIL T

Shell U.K. Oil, Shell-Mex House, Strand, London WC2R 0DX.
Telephone 01-257-3000

Data Sheet No. LTEL02 Version : 16 11 89

BRANDNAMES :	SHELL TELLUS OIL T15	60406
	SHELL TELLUS OIL T37	60407
	SHELL TELLUS OIL T46	60408
	SHELL TELLUS OIL T100	60409

PRODUCT INFORMATION

APPROVED USES

Shell Tellus Oil T are approved for use as :

hydraulic fluids and fluid power transmission oils.

If Shell Tellus Oil T are used for a purpose not covered in this section, Shell UK Oil would be grateful to receive information on the application.

KNOWN MISUSES/ABUSES

None known.

COMPOSITION

Shell Tellus Oil T are manufactured from highly refined mineral base oil derived from crude petroleum, and may contain additives, none of which give rise to any additional hazard in the finished product to that posed by the mineral oil components.

PHYSICAL AND CHEMICAL PROPERTIES

Physical State :	Liquid at Ambient Temperatures
Appearance :	Pale/Dark Amber
Odour :	Characteristic Mineral Oil
IBP. :	> 280 Deg. C.
Vapour Density (Air = 1) :	> 5
Vapour Pressure @ 20 Deg. C. :	< 0.1 kPas
Sol. in Water :	Very Low
Acidity/Alkalinity :	Neutral

TYPICAL PROPERTIES	DENSITY @ 20 Deg C.	POUR POINT Deg C.	VISCOSITY in cSt. @ 40 Deg C.	@ 20 Deg C.
SHELL TELLUS OIL T15	0.87	-50	15	31
SHELL TELLUS OIL T37	0.87	-42	37	101
SHELL TELLUS OIL T46	0.88	-40	46	130
SHELL TELLUS OIL T100	0.89	-30	100	328

COPY

FIRE AND EXPLOSION HAZARDS

Flammability Limits	- Upper :	10 % vol.
	- Lower :	1 % vol.
Autoignition Temperature in Deg. C. :		> 320
Extinguishants	- Large Fire :	Foam/Water Fog - NEVER USE WATER JET
	- Small Fire :	Foam/Dry Powder/CO2/Halon/Sand/Earth

FLASH POINT in Deg. C. by Pensky Marten Closed Cup unless stated otherwise.

SHELL TELLUS OIL T15	150
SHELL TELLUS OIL T37	177
SHELL TELLUS OIL T46	177
SHELL TELLUS OIL T100	153

See also section 4.2.2 'Fire and Explosion' in Part 1 (Page 9)

SUPPLY CLASSIFICATION

Not Dangerous for Supply

See also section 4.2.6 'Product Handling' in Part 1 (Page 12)

TRANSPORT CLASSIFICATION

Not Dangerous for Conveyance

See also section 4.2.4 'Product Receipt' in Part 1 (Page 10)

STORAGE PRECAUTIONS

See also section 4.2.5 'Product Storage' in Part 1 (Page 11)

ACUTE HEALTH HAZARDS AND ADVICE

Toxicity following single exposure to high levels (orally, dermally or by inhalation) is of a low order. The main hazards are: in the unlikely event of ingestion, aspiration into the lungs with possible resultant chemically induced pneumonia ; and, if the products are handled under high pressures, of high pressure injection injuries.

See also section 3.2 'Health Aspects of Petroleum Products' in Part 1 (Pages 4 - 7)

INHALATION

Under normal conditions of use inhalation of vapours is not feasible or likely to present an acute hazard.

SKIN

Skin contact presents no acute health hazard except in the case of high pressure injection injuries. These can lead to the loss of the affected limbs if not treated immediately and properly.

PRECAUTIONS :

Avoid contact with the skin by the use of suitable protective clothing. Where skin contact is unavoidable, a high standard of personal hygiene must be practised. Extreme care must be exercised where the product is likely to be encountered at high pressures. Where high pressures are likely to be encountered, it is recommended that safe systems of work be employed.

FIRST AID :

Skin contact does not normally require first aid, but oil soaked clothing should be removed, and contaminated skin washed with soap and water. If persistant irritation occurs, medical advice should be sought without delay.

Where a high pressure injection injury has occurred, medical attention should be obtained immediately. Show this Data Sheet and section 3.4 'Notes for Doctors' from Part I to the physician.

COPY

EYES

Eye contact may cause some discomfort.

PRECAUTIONS :

If there is a risk of splashing while handling the liquid, suitable eye protection should be used.

FIRST AID :

Flush the eye with copious quantities of water. If irritation persists refer for medical attention.

INGESTION

The main hazard following ingestion is of aspiration into the lungs during subsequent vomiting.

PRECAUTIONS :

Accidental ingestion is unlikely. Normal handling and hygiene precautions should be taken to avoid ingestion.

FIRST AID :

DO NOT INDUCE VOMITING If ingestion is suspected, wash out the mouth with water, and send to hospital immediately. Show a copy of this data sheet and section 3.4 'Notes for Doctors' from Part I to the physician.

CHRONIC HEALTH HAZARD AND ADVICE

Prolonged and repeated contact with oil products can be detrimental to health. The main hazards arise from skin contact and in the inhalation of mists. Skin contact under conditions of poor hygiene and over prolonged periods can lead to defatting of the skin, dermatitis, erythema, oil acne and oil folliculitis. Excessive and prolonged inhalation of oil mists may cause a chronic inflammatory reaction of the lungs and a form of pulmonary fibrosis.

Adherence to the precautions contained in section 3.3 'Health Precautions' in Part 1 (Pages 4 to 7) will minimise risks to health.

EXPOSURE LIMIT VALUES

UK Maximum Exposure Limits :
UK Occupational Exposure Standards :

Oil Mist, Mineral :	5 mg/cubic metre 8-hour TWA value 10 mg/cubic metre 10-min TWA value

RECOMMENDED PROTECTIVE CLOTHING

Impervious gloves and overalls where regular contact is likely, and goggles if there is a risk of splashing.

COMBUSTION PRODUCTS

The substances arising from the thermal decomposition of these products will largely depend upon the conditions bringing about decomposition. The following substances may be expected :

Carbon Dioxide
Carbon Monoxide
Water
Particulate Matter
Polycyclic Aromatic Hydrocarbons
Unburnt Hydrocarbons
Unidentified Organic and Inorganic Compounds

DISPOSAL

See section 5.2.2 'Product Disposal' in Part 1 (Page 13)

COPY

FURTHER INFORMATION

The references set out below refer to the publications given in section 6 'Further Information' in Part 1 (Pages 14 & 15)

References : B1, B2.
References : C4.
References : E1
References : L3, L6, L11, L15
References : S12
References : X2, X4, X10.
References : Y1, Y3.
References : Z3, Z8.

EMERGENCY ACTION

See section 7 'Emergency Action' in Part 1 (Page 16)

DIRECTIVE ON WASTE ELECTRICAL & ELECTRONIC EQUIPMENT (WEEE)

Electrical equipment marked with this symbol may not be disposed of in European public disposal systems after 12 August of 2005. In conformity with European local and national regulations (EU Directive 2002/96/EC), European electrical equipment users must now return old or end-of life equipment to the Producer for disposal at no charge to the user.

Note: *For return for recycling, please contact the equipment producer or supplier for instructions on how to return end-of-life equipment for proper disposal.*

Important document. Retain with product records.

GERMAN

Elektrogeräte, die mit diesem Symbol gekennzeichnet sind, dürfen in Europa nach dem 12. August 2005 nicht mehr über die öffentliche Abfallentsorgung entsorgt werden. In Übereinstimmung mit lokalen und nationalen europäischen Bestimmungen (EU-Richtlinie 2002/96/EC), müssen Benutzer von Elektrogeräten in Europa ab diesem Zeitpunkt alte bzw. zu verschrottende Geräte zur Entsorgung kostenfrei an den Hersteller zurückgeben.

Hinweis: *Bitte wenden Sie sich an den Hersteller bzw. an den Händler, von dem Sie das Gerät bezogen haben, um Informationen zur Rückgabe des Altgeräts zur ordnungsgemäßen Entsorgung zu erhalten.*

Wichtige Informationen. Bitte zusammen mit den Produktinformationen aufbewahren.

FRENCH

A partir du 12 août 2005, il est interdit de mettre au rebut le matériel électrique marqué de ce symbole par les voies habituelles de déchetterie publique. Conformément à la réglementation européenne (directive UE 2002/96/EC), les utilisateurs de matériel électrique en Europe doivent désormais retourner le matériel usé ou périmé au fabricant pour élimination, sans frais pour l'utilisateur.

Remarque : *Veuillez vous adresser au fabricant ou au fournisseur du matériel pour les instructions de retour du matériel usé ou périmé aux fins d'élimination conforme.*

Ce document est important. Conservez-le dans le dossier du produit.

ITALIAN

Le apparecchiature elettriche con apposto questo simbolo non possono essere smaltite nelle discariche pubbliche europee successivamente al 12 agosto 2005. In conformità alle normative europee locali e nazionali (Direttiva UE 2002/96/EC), gli utilizzatori europei di apparecchiature elettriche devono restituire al produttore le apparecchiature vecchie o a fine vita per lo smaltimento senza alcun costo a carico dell'utilizzatore.

Nota: *Per conoscere le modalità di restituzione delle apparecchiature a fine vita da riciclare, contattare il produttore o il fornitore dell'apparecchiatura per un corretto smaltimento.*

Documento importante. Conservare con la documentazione del prodotto.

DANISH

Elektriske apparater, der er mærket med dette symbol, må ikke bortskaffes i europæiske offentlige affaldssystemer efter den 12. august 2005. I henhold til europæiske lokale og nationale regler (EU-direktiv 2002/96/EF) skal europæiske brugere af elektriske apparater nu returnere gamle eller udtjente apparater til producenten med henblik på bortskaffelse uden omkostninger for brugeren.

Bemærk: *I forbindelse med returnering til genbrug skal du kontakte producenten eller leverandøren af apparatet for at få instruktioner om, hvordan udtjente apparater bortskaffes korrekt.*

Vigtigt dokument. Opbevares sammen med produktdokumenterne.

SWEDISH

Elektronikutrustning som är märkt med denna symbol kanske inte kan lämnas in på europeiska offentliga sopstationer efter 2005-08-12. Enligt europeiska lokala och nationella föreskrifter (EU-direktiv 2002/96/EC) måste användare av elektronikutrustning i Europa nu återlämna gammal eller utrangerad utrustning till tillverkaren för kassering utan kostnad för användaren.

Obs! *Om du ska återlämna utrustning för återvinning ska du kontakta tillverkaren av utrustningen eller återförsäljaren för att få anvisningar om hur du återlämnar kasserad utrustning för att den ska bortskaffas på rätt sätt.*

Viktigt dokument. Spara tillsammans med dina produktbeskrivningar.

SPANISH

A partir del 12 de agosto de 2005, los equipos eléctricos que lleven este símbolo no deberán ser desechados en los puntos limpios europeos. De conformidad con las normativas europeas locales y nacionales (Directiva de la UE 2002/96/EC), a partir de esa fecha, los usuarios europeos de equipos eléctricos deberán devolver los equipos usados u obsoletos al fabricante de los mismos para su reciclado, sin coste alguno para el usuario.

Nota: *Sírvase ponerse en contacto con el fabricante o proveedor de los equipos para solicitar instrucciones sobre cómo devolver los equipos obsoletos para su correcto reciclado.*

Documento importante. Guardar junto con los registros de los equipos.

DUTCH

Elektrische apparatuur die is voorzien van dit symbool mag na 12 augustus 2005 niet meer worden afgevoerd naar Europese openbare afvalsystemen. Conform Europese lokale en nationale wetgegeving (EU-richtlijn 2002/96/EC) dienen gebruikers van elektrische apparaten voortaan hun oude of afgedankte apparatuur kosteloos voor recycling of vernietiging naar de producent terug te brengen.

Nota: *Als u apparatuur voor recycling terugbrengt, moet u contact opnemen met de producent of leverancier voor instructies voor het terugbrengen van de afgedankte apparatuur voor een juiste verwerking.*

Belangrijk document. Bewaar het bij de productpapieren.

POLISH

Sprzęt elektryczny oznaczony takim symbolem nie może być likwidowany w europejskich systemach utylizacji po dniu 12 sierpnia 2005. Zgodnie z europejskimi, lokalnymi i państwowymi przepisami prawa (Dyrektywa Unii Europejskiej 2002/96/EC), użytkownicy sprzętu elektrycznego w Europie muszą obecnie przekazywać Producentowi stary sprzęt lub sprzęt po okresie użytkowania do bezpłatnej utylizacji.

Uwaga: *Aby przekazać sprzęt do recyklingu, należy zwrócić się do producenta lub dostawcy sprzętu w celu uzyskania instrukcji dotyczących procedur przekazywania do utylizacji sprzętu po okresie użytkowania.*

Ważny dokument. Zachować z dokumentacją produktu.

PORTUGESE

Qualquer equipamento eléctrico que ostente este símbolo não poderá ser eliminado através dos sistemas públicos europeus de tratamento de resíduos sólidos a partir de 12 de Agosto de 2005. De acordo com as normas locais e europeias (Directiva Europeia 2002/96/EC), os utilizadores europeus de equipamentos eléctricos deverão agora devolver os seus equipamentos velhos ou em fim de vida ao produtor para o respectivo tratamento sem quaisquer custos para o utilizador.

Nota: *No que toca à devolução para reciclagem, por favor, contacte o produtor ou fornecedor do equipamento para instruções de devolução de equipamento em fim de vida para a sua correcta eliminação.*

Documento importante. Mantenha junto dos registos do produto.